Petroleum & Coal
ISSN 1337-7027

Available online at www.vurup.sk/pc
Petroleum & Coal 51(3) 208-215, 2009

A COMPARATIVE STUDY FOR THE SIMULATION OF INDUSTRIAL NAPHTHA REFORMING REACTORS WITH CONSIDERING PRESSURE DROP ON CATALYST

Jamshid Behin*[1], Hamid Reza Kavianpour[2]

[1]Department of Chemical Engineering, Faculty of Engineering, Razi University, Kermanshah, IRAN, E-mail: Behin@razi.ac.ir, [2]Research and Development Group, Kermanshah Refining Oil Company, IRAN

Received May 14, 2009, accepted July 15, 2009

Abstract

The steady state simulation of an industrial naphtha catalytic reformer was carried out considering a kinetic model of reforming reactions proposed by Padmavathi and Chaudhuri (1997). The pressure drop on solid catalyst was included using Ergun equation. The process model was applied to predict reformate's composition and temperature profiles in the reforming unit of Kermanshah/Iran refinery consists of three fixed bed reactors in series. The mole fraction of paraffins, naphthenes, and aromatics in effluent of third reactor were determined. The final outlet results were compared with experimental data and a good agreement was shown. The simulation results with considering pressure drop were in a better agreement with actual operation plant data whereas no significant difference was observed.

Keywords: naphtha reforming; catalytic reforming; simulation; pressure drop; reformer

1. Introduction

Catalytic naphtha reformers are an integral part of an oil refinery, converting low octane naphtha to a high octane reformate, through a series of catalytic reactors. Hydrogen and light hydrocarbons are also obtained as side products. The normal commercial practice is to operate a system of 3 or 4 adiabatic reactors in series with intermediate preheaters. The fixed bed reactors operate adiabatically at temperatures of 450-550°C, total pressures of 10-35atm, and molar hydrogen-to-hydrocarbon ratios (H_2/HC) of 3-8. The hydrodesulfurized straight-run naphtha used as catalytic reforming feedstock. The naphtha feed is very complex consisting of several hundred components and each of them undergoes various reactions. A detailed model considering all the components and reactions is very complex and hence a properties and kinetic behavior would be more convenient [1]. The feed to the first reactor is composed of normal and branched paraffins, 5 and 6 membered ring naphthenes, and single-ring aromatics. A large number of reactions occur in catalytic reforming, such as dehydrogenation and dehydroisomerization of naphthenes to aromatics, dehydrogenation of paraffins to olefins, dehydrocyclization of paraffins and olefins to aromatics, isomerization or hydroisomerization to isoparaffins, isomerization of alkylcyclopentanes, and substituted aromatics and hydrocracking of paraffins and naphthenes to lower hydrocarbons. The major reactions in the first reactor are endothermic and very fast, such as dehydrogenation of naphthenes. Recently there has been a renewed interest in the reforming process, first, because reformate is a major source of aromatics in gasoline, and second, because of the new legislation of benzene and aromatics content in commercial gasoline. In this sense, refiners have reduced the severity of the industrial reforming plants in order to decrease the amount of aromatics in gasoline, however it adversely affects the reformate octane number. Because of these reasons and to optimization purposes, it is very important to develop an appropriate kinetic model

capable of predicting the detailed reformate composition in combination with a suitable catalytic reforming reactor model. Various kinetic models to represent catalytic reforming have been reported in literature, which have different level of sophistication. The model suggested by Smith [2] is probably the simplest, where the complex naphtha mixture is idealized so that each of the three hydrocarbon classes, paraffins, naphthenes, and aromatics, is represented by a single compound having the average properties of that class with this simplified model, a kinetic analysis is developed which described the reforming operation with satisfactory accuracy [2]. Kmak and Stuckey[3 studied reforming over a wide range of operating conditions using pure components, mixtures and naphtha feed and developed a detailed model. Their model was limited to the representation of isothermal operation at some point within the experimental temperature range in which they fitted the parameters [3]. Zhorov *et al.* [4] considered C_5, C_6 lumps of naphtha and direct formation of aromatics from paraffins. They showed that increasing the mass of catalyst in the first two reactors with corresponding decreases in third reactor can increase aromatic yield to some extent [4]. Jenkins and Stephens [5], considered 78 reactions involving 31 components and calculated pressure exponents. They have shown that the change in total pressure affects the overall reaction rate, while all other operating parameters being constant [5]. Ramage *et al.* [6,7], published a detailed complete model considering C_6-C_8 lumps of naphthenes, paraffins and aromatics. The limitation of their model was the consideration of the short range of hydrocarbons of C_6-C_8 [6,7]. Turpin [8], discussed the typical refinery problems that can be solved accurately using process simulation model and showed that a reduction of the reaction pressure results in higher reformate and hydrogen yields [8]. The component lumping scheme used by the Taskar (1997) model contains 35 component lumps. The isoparaffins have been further broken down into single-branched paraffins and multi-branched paraffins. As the carbon number increases and the number of branches possible in a chain increases, the physical properties of single-branched and multi-branched paraffins with the same carbon number are no longer similar. The 6-carbon ring C_6 naphthene component was not considered in the model because, in the actual process, the 5-carbon ring C_6 naphthene dehydrogenates directly to benzene, without first isomerizing to the 6-carbon ring C_6 naphthene. The 6-carbon ring C_9 naphthenes and 6-carbon ring C_{10} naphthenes are present in very small quantities in naphtha. In Taskar's model, the 6-carbon ring C_9 naphthenes have been lumped in with the 5-carbon ring C_9 naphthenes, and the 6-carbon ring C_{10} naphthenes have been lumped in with the 5-carbon ring C_{10} naphthenes. The model assumes that the feed composition remains constant for the entire reformer cycle [9]. A simulation model for catalytic reforming has been also developed by Padmavathi and Chaudhuri, to monitor commercial plant performance. In their paper the lumping details of the feed and reacting scheme, parameter estimation and model validation details were given. The results of their model validated for 4 different commercial reactors performance with a good accuracy [1]. On the basis of Rahimpour's model, the average inlet temperature of reformers can be increased to compensate aromatic yield. They have shown that the optimum mass of catalyst distribution for maximum aromatic yield of the Shiraz refinery's reformers was 30, 30, and 40% respectively in three reactors [10]. Jorge and Eduardo [11] proposed a model that utilizes lumped mathematical representation of the reactions that take place, which are written in terms of isomers of the same nature. These groups range from 1 to 11 atoms of carbon for paraffins, and from 6 to 11 carbon atoms for naphthenes and aromatics. The cyclohexane formation via methylcyclopentane isomerization and paraffins isomerization reactions were considered in their model. Additionally, an Arrhenius-type variation was added to the model in order to include the effect of pressure and temperature on the rate constants. The kinetic parameters values were estimated using experimental information obtained in a fixed-bed pilot plant in which the three reforming reactors were loaded with different amounts of catalyst [11].

2. Process description

Catalytic naphtha reforming is a gas phase process. The process flow diagram of the reforming unit was shown in Figure 1. After pretreating the naphtha to remove any contaminants, it is mixed with a recycled gas stream containing 60-90 mol% hydrogen. The rest of the gas stream contains, in descending order by mole percentage, the C_1 to

C_5 hydrocarbons, methane, ethane, propane, butanes, and pentanes. Even though the process produces hydrogen, this hydrogen rich stream is needed to maintain a hydrogen-to-hydrocarbon molar ratio (H_2/HC) in the range of 5-10. The bifunctional catalyst was distributed in three adiabatic reactors and heaters are installed between each reactor to reheat the stream into the reaction temperature range, before entering the next reactor. The product stream from the reactors contains reformate, hydrogen, and the C_1 to C_4 hydrocarbons. These light components need to be separated from the reformate [12,13].

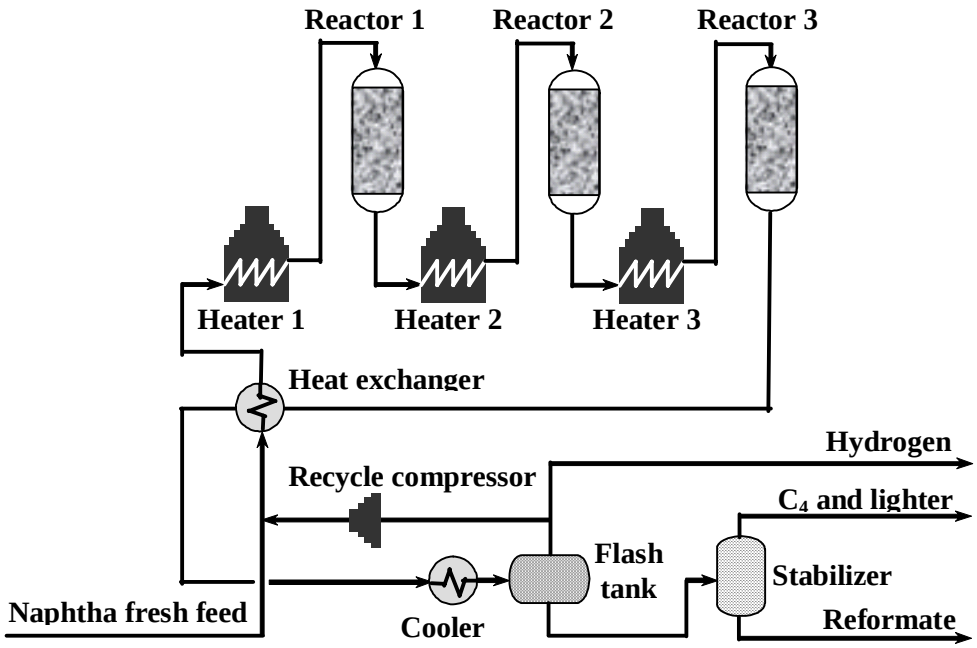

3. Main model

In this work, the naphtha feed and reforming products were considered as 26 hydrocarbon lumps which undergo 6 major reforming reactions. The effect of pressure drop was included. Upon validation using plant data obtained from catalytic reformers of Kermanshah refinery (Iran), the model has been used to optimize the operating conditions of the reformers [14].

3.1. Reaction network

The feed of the reforming unit consist of different hydrocarbon groups including paraffins, naphthenes and aromatics. In the present model, the naphtha feed has been characterized by naphthenes (alkylcyclohexanes: ACH, alkylcyclopentanes: ACP), paraffins (normal paraffins: NP, isoparaffins: IP), and aromatics (A) lumps with carbon numbers ranging from C_6 to C_9. In this model, the lumps of hydrocarbons mentioned above are related by major reforming reactions network presented as follows [1]:

- Dehydrogenation of naphthenes to aromatics: This reaction is catalyzed by the metal function of the catalyst and is the fastest reforming reaction. This endothermic reaction increases the octane number of the product. The reaction is favored at high temperature and low pressure.

$$\mathrm{ACH_n} \rightleftharpoons \mathrm{A_n} + 3\mathrm{H_2} \tag{1}$$

- Ring expansion: The isomerization of alkylcyclopentanes to alkylcyclohexanes is followed by dehydrogenation to aromatics. The dehydrocyclization of paraffins to naphthenes is a comparatively slow reaction and increases the octane number of products.

$$\mathrm{ACP_n} \rightleftharpoons \mathrm{ACH_n} \tag{2}$$

$$\mathrm{ACH_n} + \mathrm{H_2} \rightleftharpoons \mathrm{NP_n} \tag{3}$$

$$\mathrm{ACH_n} + \mathrm{H_2} \rightleftharpoons \mathrm{IP_n} \tag{4}$$

$$\mathrm{IP_n} \rightleftharpoons \mathrm{ACH_n} + \mathrm{H_2} \tag{5}$$

$$\mathrm{NP_n} \rightleftharpoons \mathrm{ACP_n} + \mathrm{H_2} \tag{6}$$

- *Isomerization:* The isomerization of normal paraffins to isoparaffins is highly desirable reaction as the naphtha feed consists of more percentage of normal paraffins which are isomerized to isoparaffins having high octane number.

$$NP_n \rightleftharpoons IP_n \tag{7}$$

- *Paraffins cracking:* Hydrocracking of heavy paraffins to light paraffins is an exothermic reaction and reaction rate increases with increasing temperature, pressure and paraffin carbon number.

$$NP_n + \frac{n}{3}H_2 \rightarrow \frac{n}{15}\sum_{i=1}^{5} C_i \tag{8}$$

$$IP_n + \frac{n}{3}H_2 \rightarrow \frac{n}{15}\sum_{i=1}^{5} C_i \tag{9}$$

- *Naphthenes cracking:* In naphthenes, cyclopentanes are more susceptible to cracking than cyclohexanes. Hydrocracking of naphthenes is less than that of paraffins.

$$ACH_n + \frac{n-3}{3}H_2 \rightarrow \frac{n}{15}\sum_{i=1}^{5} C_i \tag{10}$$

$$ACP_n + \frac{n+3}{3}H_2 \rightarrow \frac{n}{15}\sum_{i=1}^{5} C_i \tag{11}$$

- *Hydrodealkylation:* Hydrodealkylation is the slowest of all the reforming reactions. It is an exothermic reaction and is favored at high temperatures and pressures.

$$A_{n+1} + H_2 \rightarrow A_n + CH_4 \tag{12}$$

n is between 6-9 for reaction's equations of 1 to 11 and between 6-8 for reaction's equation of 12. A full list of reaction equations as well as values of pre-exponential factor ($A_{i,j}$), activation energy (E_j), and equilibrium constant of reaction ($K_{i,j}$) are available in the paper of Padmavathi and Chaudhuri (1997) [1].

3.2. Mass and heat balance

The molar (or mass) flow rate of each component "i" through the non-isothermal plug flow reactor including catalyst was determined by mass balance:

$$\frac{dF_i}{dw} = \sum_{j=1}^{n_r} \beta_j r_{i,j} \qquad i = 1, 2, ..., n_c \tag{13}$$

Where,

n_c: the number of components, 26; n_r: the number of reactions, 47; F_i: the molar flow rate of the component "i" (kgmol/h) ; w: catalyst weight (kg); β_j is 1 if the component "i" is a product, -1 if the component "i" is a reactant, and 0 if the component "i" is not involved in the jth reaction.

Based on the Padmavathi and Chaudhuri's model, the height and diameter of the reactor need not be specified, only the amount of catalyst occupying the reactor volume needs be known. This makes the model flexible, in order to simulate reformer's reactors of different sizes. The temperature change through the adiabatic reactors was obtained from energy balance:

$$\frac{dT}{dw} = \sum_{i=1}^{n_c} \left[\frac{\sum_{j=1}^{n_r} \left(-\Delta H_{i,j}\, r_{i,j} \right)}{F_i Cp_i} \right] \tag{14}$$

where,

T: temperature (K); Cp_i: heat capacity of component "i" (kJ/kgmol.K); ΔH_{ij}: heat of reaction of component "i" in the jth reaction (kJ/kgmol).

3.3. Pressure drop

The Padmavathi and Chaudhuri's model was not considered the pressure drop through the reactors. Our present approach considers pressure drop using the Ergun equation in a fixed bed reactor [9]:

$$\frac{dP_T}{dw} = -\frac{G}{\rho d_p \varepsilon^3}\left[\frac{150(1-\varepsilon)\mu}{d_p} + 1.75G\right]\frac{1}{A_c \rho_c} \tag{15}$$

where,
P_T: total reactor pressure (bar); ρ: density of the gas mixture (kg/m^3); A_c: cross-sectional area of the bed (m^2); μ: viscosity of the gas mixture (cP); dp: diameter of the catalyst particle (m); ρ_c: density of the catalyst (kg/m^3); ε: void fraction of catalyst bed (-); G: superficial mass velocity of gas mixture (kg/m^2.s).

4. Experimental plant's data

Table 1 shows the design parameters and operating conditions of the catalytic reformers of Kermanshah/Iran refinery [14].

Table 1. Operating conditions of reforming unit

Reactor number	1	2	3
Mass of catalyst (kg)	1 00	2 00	4 00
Inlet temperature(K)	773	773	773
Inlet pressure(kPa)	3 792	3 703	3 654

The total catalyst weight was 9000 kg. The feed flow rate of reforming unit was shown in Table 2. The equilibrium constants, activation energy, and pre-exponential factor needed to calculate the rate constants of various reforming reactions, and also the heat of reactions, heat capacity, used in this model were taken from literature [1,12].

Table 2. Feed flow rate of reforming unit [14]

Feed molar flow rate	(kgmol/hr)
Paraffins	121.78
Naphthenes	54.59
Aromatics	33.59
Total	209.96

5. Results and discussion

The model integrates numerically the component mass and energy balance and pressure drop differential equations by fourth order Runge-Kutta method with Matlab-7 applied to each individual reactor (catalyst weight).

5.1. Model validation

The experimental data are obtained in start of run and the catalyst activity was assumed equal to 1. Table 3 compared the results of modeling with and without considering the pressure drop (ΔP) through the reactors. Absolute relative error of calculation with considering pressure drop was less than that without considering pressure drop.

5.2. Simulation results

The concentration profile of each component versus catalyst weight was shown in Figure 2 (a, b and c). It can be observed that all naphthene hydrocarbon contents were disappeared by passing the feedstock through the unit in steady state conditions. A high rate of conversion of naphthenes was found in the first reactor. After second reactor, naphthenes concentration approaches to a very low steady-state value.

The Figure 3 shows the simulation results for mole fraction of lumped component through three reformers whose mathematical model was programmed and executed in Matlab-7. The increasing yield was due to the endothermic dehydrogenation of naphthenes to aromatics and was favored by higher temperatures. The dehydrogenation of naphthenes and production of aromatics and hydrogen was the fastest among reforming reactions, therefore it nearly took place in 1st reactor and the variation of aromatics and naphthenes concentration were very significant. The increase in concentration of aromatics in the 2nd and 3rd reactors was basically due to the disappearance of paraffins. Hydrocracking of naphthenes and paraffins were slow and exothermic reactions, so these reactions take place often in 3rd reactor.

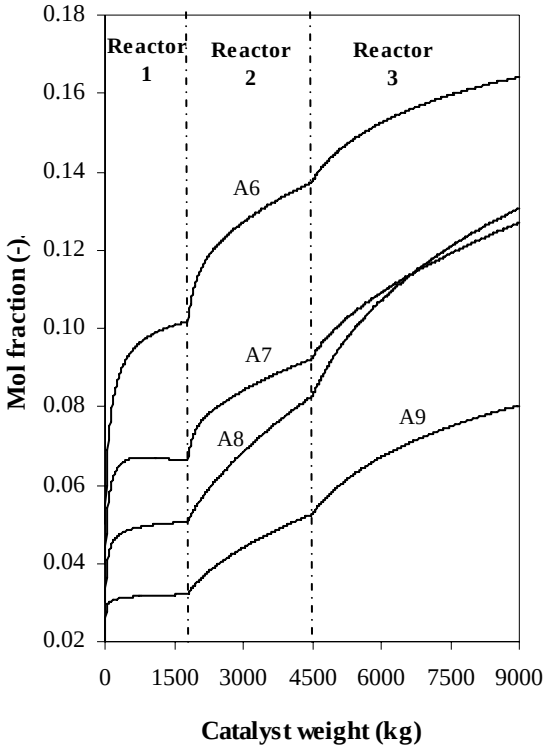

a) Aromatics

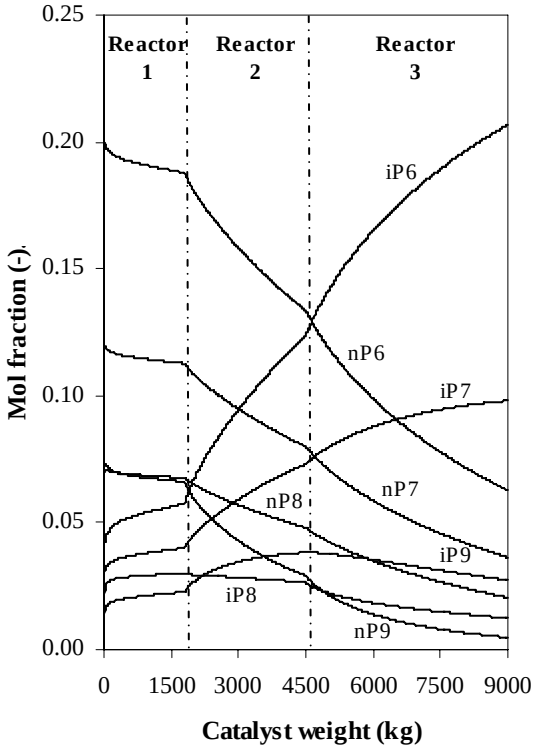

b) Paraffins

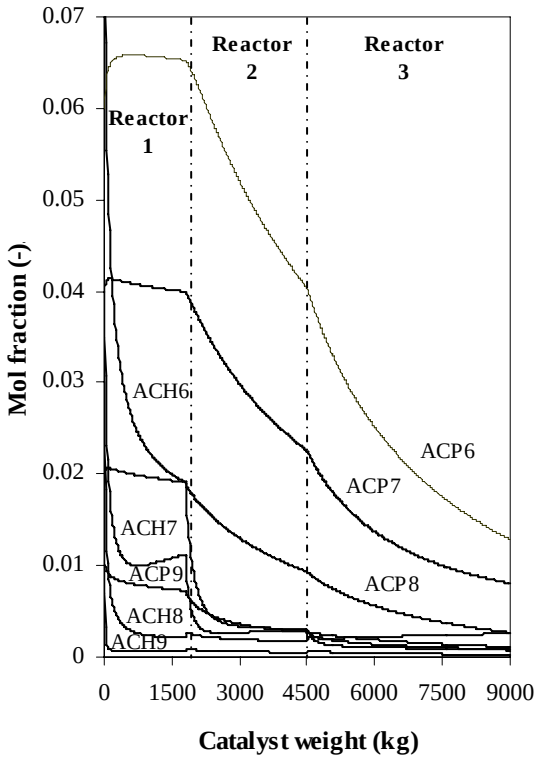

c) Naphthenes

Figure 2. Concentration profiles in three reactors

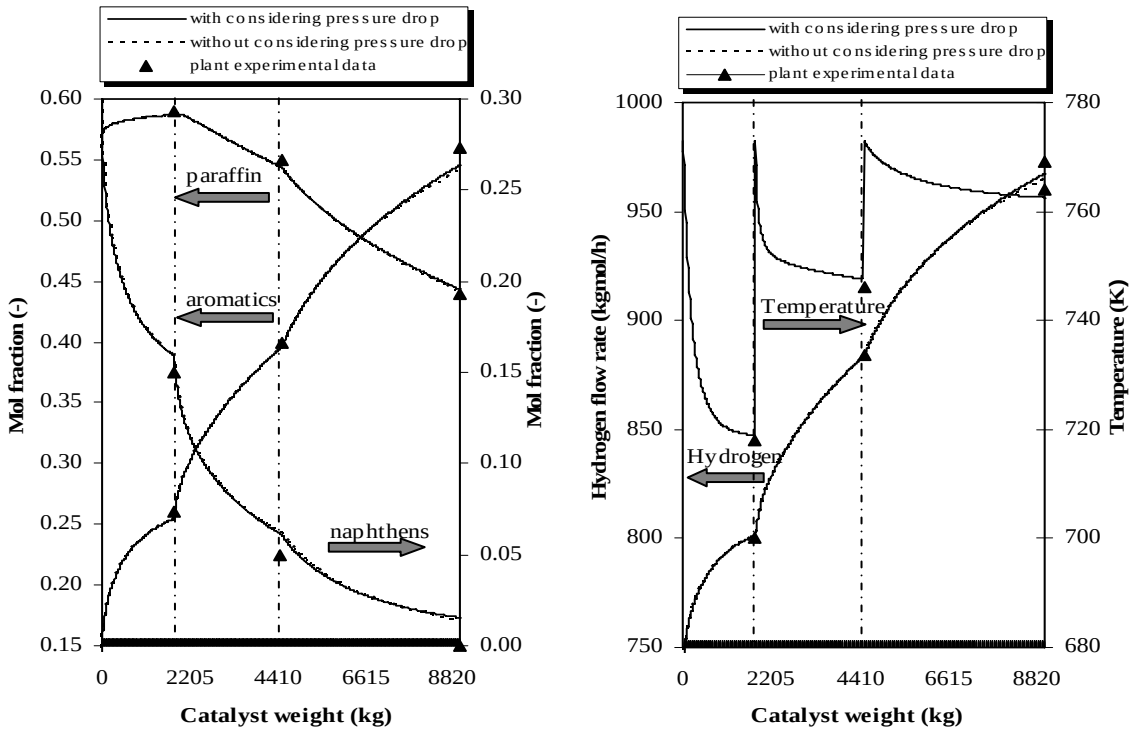

a) mole fraction **b) flow rate and temperature**

Figure 3. Concentration profile of lumped components along three reforming reactors

This model was also applied to study the effect of hydrogen to hydrocarbon ratio on aromatic percentage in reformate and temperature drop (Table 4). An increase in hydrogen to hydrocarbon ratio decreases the temperature drop and percentage of each aromatic in reformate. Therefore decreasing the H_2/H.C ratio results increasing the aromatic yield, however decreasing the H_2/H.C ratio, results the coke deposition on catalyst surface and decreasing the catalyst activity.

Table 3. Predicted and actual results with and without considering pressure drop

Component	Plant data	Model's results		Absolute relative error (%)	
		Without considering ΔP	With considering ΔP	Without considering ΔP	With considering ΔP
1st reactor (output)					
Paraffins (mol%)	59.0	58.71	58.68	0.49	0.54
Naphthenes (mol%)	15.0	15.92	15.88	6.13	5.87
Aromatics (mol%)	26.0	25.37	25.43	2.42	2.19
Hydrogen (kmol/h)	800.0	801.04	800.50	0.13	0.06
2nd reactor (output)					
Paraffins (mol%)	55.0	54.45	54.33	1.00	1.22
Naphthenes (mol%)	5.0	6.13	6.18	22.6	23.6
Aromatics (mol%)	40.0	39.51	39.59	1.22	1.02
Hydrogen (kmol/h)	884	882.90	883.40	0.12	0.07
3rd reactor (output)					
Paraffins (mol%)	44.0	44.34	44.10	0.77	0.23
Naphthenes (mol%)	0.0	1.55	1.35	1.55	1.35
Aromatics (mol%)	56.0	54.11	54.55	3.37	2.59
Hydrogen (kmol/h)	973.0	964.60	967.20	0.86	0.59

Table 4. The effect of hydrogen to hydrocarbon ratio on aromatic yields and temperature drop

H_2/H.C	4.0	4.5	5.0 (Base)	5.5	6.0
XA6	0.16830	0.16606	0.16415	0.16247	0.16100
XA7	0.13147	0.12906	0.12699	0.12515	0.12355
XA8	0.13644	0.13334	0.13064	0.12822	0.12606
XA9	0.08356	0.08181	0.08030	0.07896	0.07777
ΔT (K)	-104.29	-100.01	-96.13	-92.58	-89.31

6. Conclusions

A kinetic model for naphtha catalytic reforming reactions has been developed. The model takes into account the most important reactions of this process in terms of isomers of the same nature (paraffins, naphthenes and aromatics). The reformate's composition and temperature profiles have been obtained to provide information about the extent of conversion in each of three reactors. The simulation results have been found to be in close agreement with plant data. By applying this model, taking into account the pressure drop, it is possible to select optimum operating conditions for commercial naphtha reforming process with higher accuracy as well as to simulate new reforming process using different feed composition.

References

[1] Padmavathi G. and Chaudhuri, K.K., Modeling and simulation of commercial catalytic naphtha reformers, Can. J. Chem. Eng., 1997, 75 (10), 930.

[2] Smith R.B., Kinetic analysis of naphtha reforming with platinum catalyst, Chem. Eng. Prog.; 1959, 55 (6), 76.

[3] Kmak W.S. and Stuckey A.N., Powerforming process studies with a kinetic simulation model, AIChE National Meeting, New Orleans, 1973, 56, 99.

[4] Zhorov Y.M., Panchenkov G.M. and Shapiro I.Y., Mathematical Model of platforming under stationary conditions with allowance for isomerization reactions, Khim. Technol. Topl. Mas., 1980, 15 (7), 9.

[5] Jenkins J. H. and Stephens T.W., Kinetics of catreforming, Hydrocarbon Proc., 1980, 1 (59), 163.

[6] Ramage M.P., Graziani, K.R. and Krubeck F.J., Development of Mobil's kinetic reforming model, Chem. Eng. Sci., 1980, 35 (7), 41.

[7] Ramage M.P., Graziani, K.R., Krubeck, F.J. and Choi, B.C., A review of Mobil's industrial process modeling philosophy, Adv. Chem. Eng., 1987, 13 (14), 193.

[8] Turpin L.E., Modeling Commercial Reformers, Marcel Dekker, New York, 1995.

[9] Taskar U. and Riggs J.B., Modeling and optimization of a semi-regenerative catalytic naphtha reformer, AIChE J., 1997,43, 740.

[10] Rahimpour M.R., Esmailian S. and Bagheri-Ghalehghazi N., A kinetic and activation model for industrial catalytic naphtha reforming, Iranian J. Sc. & Tech. Transition B, 2003, 27 (B2), 280.

[11] Jorge A.J. and Eduardo V.M., Kinetic modeling of naphtha catalytic reforming reactions, Energy & Fuels, 2000, 14, 1032.

[12] Bommannan D., Srivastava R.D. and Saraf D.N., Modeling of catalytic naphtha reformers, Can. J. Chem. Eng., 1989, 76 (67), 405.

[13] Lee J.W., Ko Y.C., Jung Y.K. and Lee K.S., A modeling and simulation study on a naphtha reforming unit with a catalyst circulation and regeneration system, Computers Chem. Eng., 1997, 21, 1105.

[14] Kermanshah Refinery, Operating data of platforming unit, 2005.